Lab 2: Socket Programming

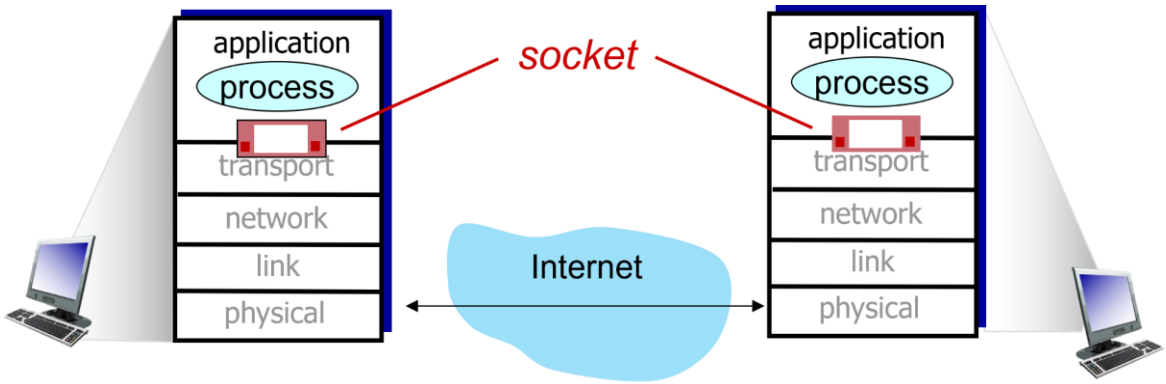

Background

Socket programming is an alternative way of developing a communication channel between two hosts over the network. A socket is bound to a port number to identify the application process. To establish such communication, students can implement it based on any language socket programming such as Java, Javascript, Python, etc., and any platform (Linux/Unix, macOS, Windows).

Objectives

1. Students can understand and implement socket programming for a TCP client and a TCP server.
2. Students establish communication over networks via a socket.

Setup

1. Install Python (Download Python | Python.org)
2. Download the activity code repository using git

```
git clone https://github.com/SirawitN/com-net-socket-\
programming.git
```

3. Setup Python environment

```
cd com-net-socket-programming
python3 -m venv socket

source ./socket/bin/activate
```

`pip install requests getmac pyngrok`
Note: For Linux/macOS: `source ./socket/bin/activate` For Windows (CommandPrompt): `.\socket\Scripts\activate` For Windows (Powershell): `.\socket\Scripts\Activate.ps1` To exit the environment: `deactivate`

Lab 2.1: Implementing Student's Computer as a TCP Client

In this activity, students will assume the role of a TCP client. A TCP server, hosted by the Department of Computer Engineering, Faculty of Engineering, Chulalongkorn University, will be made available. Students are required to establish a connection and transmit their information to the server.

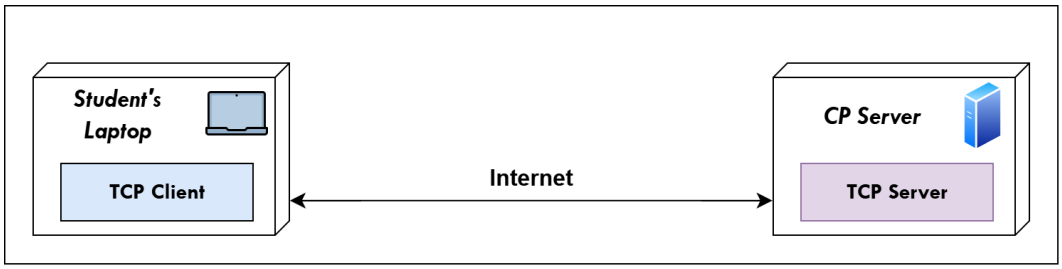

Sequence Diagram

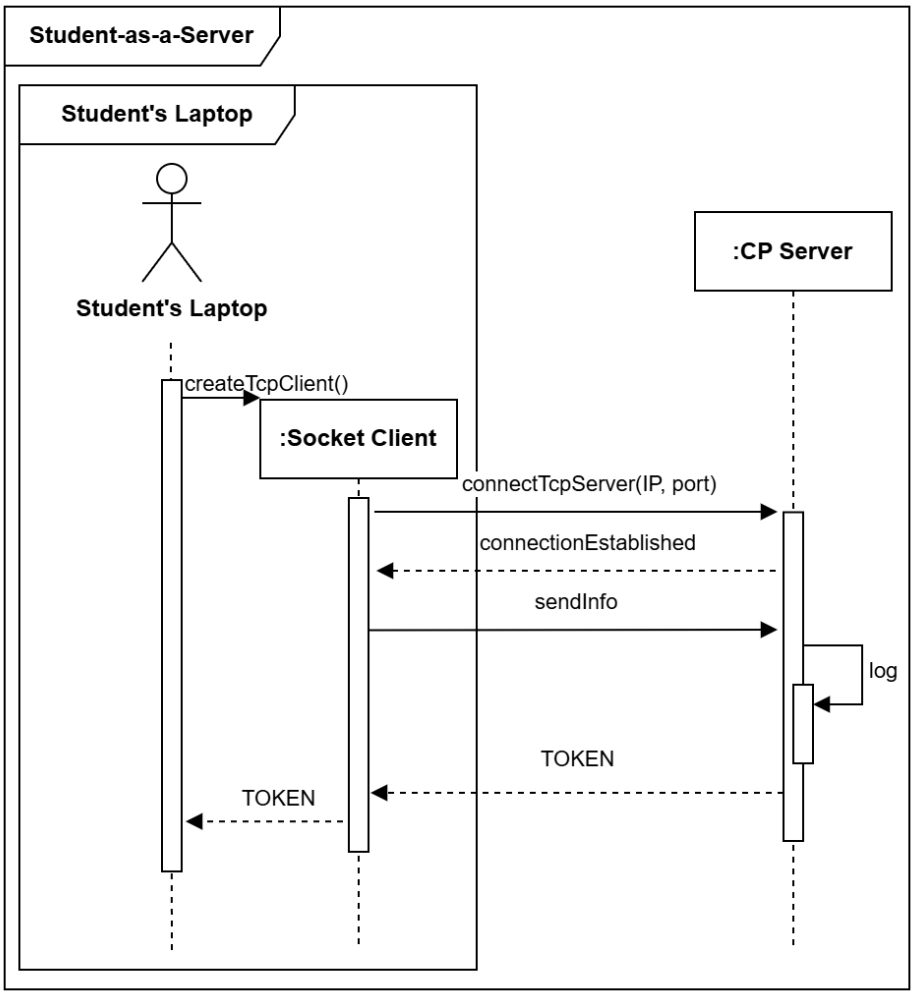

Instructions

1. Navigate to the folder "**com-net-socket-programming/Lab2.1**" from the downloaded code.
2. Locate the Python file named "**client.py**". Your task is to complete all the sections marked with **#TODO** by implementing the appropriate code in order to create a TCP client.
3. Once the code is completed, establish a socket connection to the server using the server's IP address and port, and submit your information. The server will respond with a **TOKEN**.
    a. *The server's IP and port will be given in class*
    b. *The information you need to submit should follow this format.*

```
{
    "ID": <student id>,
    "Hostname": <hostname>,
    "User": <user>,
    "OS": <os>,
    "OS version": <version>,
    "Mac": <mac>,
    "Local IP": <local-IP>,
    "Public IP": <public-IP>,
}
```

c. *The response will be in the following format*

```
{"TOKEN": <token>
```

4. Submit the received **TOKEN** to **myCourseVille** as part of your assignment.

Lab 2.2: Implementing Student's Computer as a TCP Server

In this activity, students will reverse roles and function as a TCP server. Students have to implement the server, expose it to the internet, and establish communication with a client hosted by the department.

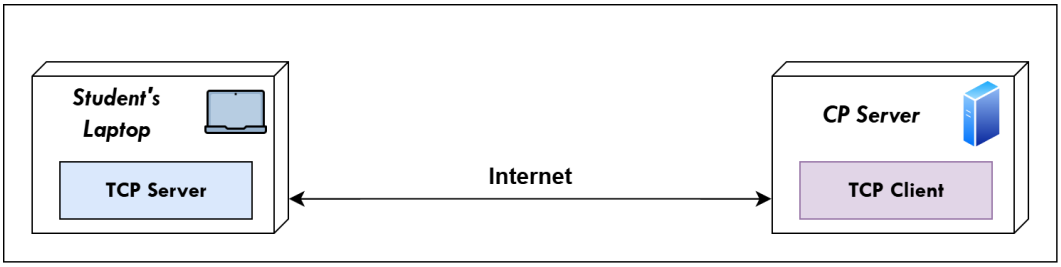

Sequence Diagram

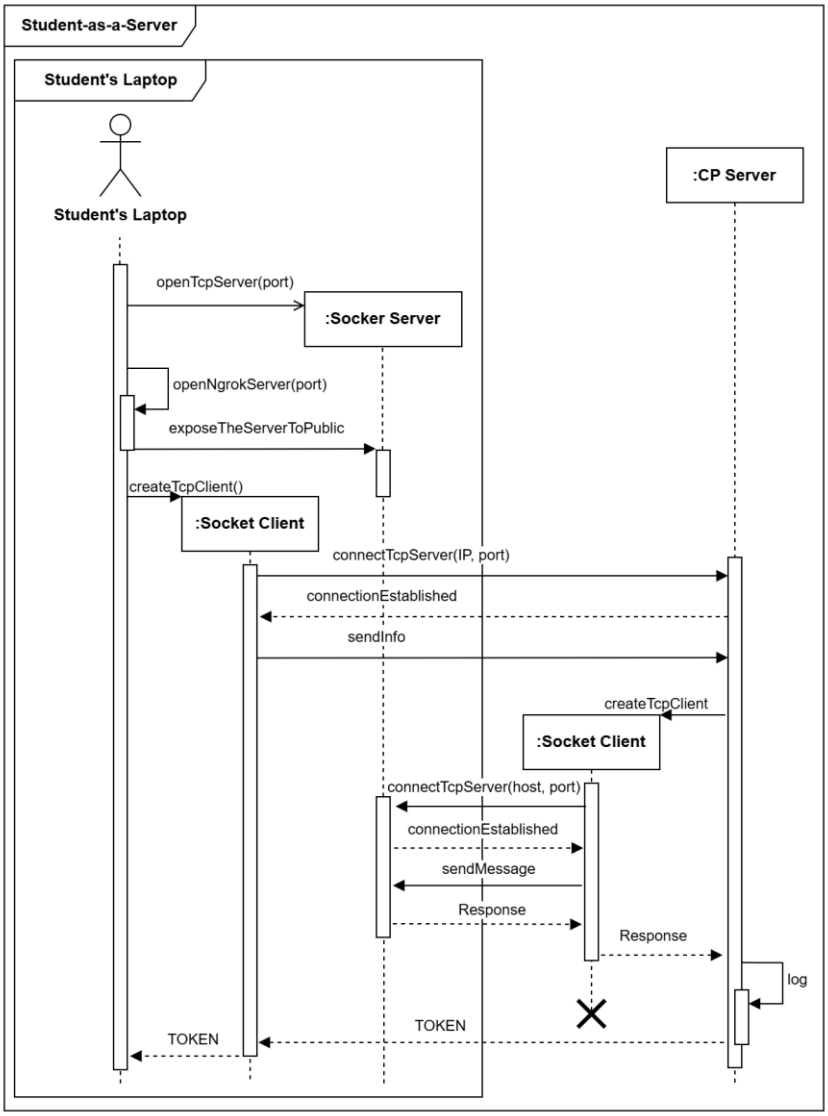

Instructions

1. Navigate to the folder "**com-net-socket-programming/Lab2.2**" from the downloaded code.
2. Locate the Python file named "**server.py**". Your task is to complete all the sections marked with **#TODO** by implementing the appropriate code in order to create a TCP server.
3. Once the code is completed, start the server with the following command

```
NGROK_AUTHTOKEN=<ngrok-auth-token> python3 \
server.py
```

   a. The server will be accessible via a public URL as followed.

```
[INFO] Server started, listening on port 12345
[INFO] Server is accessible via public URL: NgrokTunnel: "tcp://6.tcp.ngrok.io:16973" -> "localhost:12345"
[INFO] Connection accepted from ('127.0.0.1', 7692)
```

   From the above example
   - The **server host** is *6.tcp.ngrok.io*
   - The **server port** is *16973*

   b. *For anyone encountering the error 'NGROK_AUTHTOKEN is not recognized as an internal or external command', run the following command before starting the server*

```
ngrok config add-authtoken <ngrok-auth-token>
```

4. Create a new client file to establish a socket connection to the department's server using the provided IP address and port. You must send your information, including your server's host and port. The department's server will then create a client to connect to your server.
   a. *The server's IP and port will be given in class*
   b. *The information you need to submit should follow this format.*

```
{
    "ID": <student id>,
    "Hostname": <hostname>,
    "User": <user>,
    "OS": <os>,
    "OS version": <version>,
    "Mac": <mac>,
    "Local IP": <local-IP>,
    "Public IP": <public-IP>,
    "Host": <server hostname>,
    "Port": <server port>
}
```

5. If the connection is successful, your client will receive a **TOKEN** as a response.
    a. *The response will be in the following format*

```
{"TOKEN": <token>
```

6. Submit the received **TOKEN** to **myCourseVille** as part of your assignment.

Resource

- https://realpython.com/python-sockets/
- https://www.geeksforgeeks.org/socket-programming-python/